Parquet lacquers

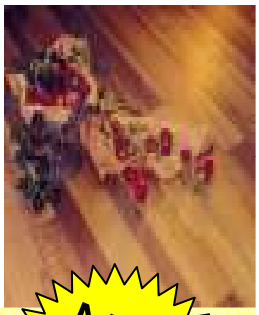

Rosner,
A trademark of MBH-Lacke GmbH, Siebenbürger Straße 7, D-82538 Geretsried
Tel. +49 - 8171 - 9809 0 - Fax +49 - 8171 - 9809 80
info@rosner-international.com - www.rosner-international.com

NMP free

Hyd-Ro Joint-Filler (Hyd-Ro Fugenkitt)
Binder for usage with dust of wood to fill joints between parquet boards.
Hyd-Ro Joint-Filler is fast-drying, NMP-free and can be considered as a W3-product.

Hyd-Ro Scraper-Gel (Hyd-Ro Spachtelgel)
Primer developed for application with a scraper. Has a good filling effect on pores. It's appropriate on all common exotic woods. Minimise the adhesive bonding of the sides between parquet boards. It can be scraped between all Hyd-Ro topcoats.
Hyd-Ro Scraper-Gel is NMP-free and can be considered as a W2-product.

Hyd-Ro Basecoat (Hyd-Ro Grundlack)
It reduces the adhesive bonding of the sides between parquet boards. It causes a warm wood wetting of the wood. It's usable by rolling or scraping application, it also is appropriate on all common exotic woods.
Hyd-Ro Basecoat is NMP-free and can be considered as a W3-product.

Hyd-Ro Parquet (Hyd-Ro Parkett) is available in glossy, half-matt and matt.
It's an aqueous polyurethane/acrylate dispersion lacquer. Its main usage is on parquet floors where normal strain is to be expected. It also can be used on wooden floors, on stair steps and for interior fitting. It's useable as base- and topcoat. It's also appropriate on all common exotic woods.
Field of application: living and sleeping rooms, floors and staircases.
Hyd-Ro Parquet is NMP-free and can be considered as a W2-product.

Hyd-Ro Parquet Plus (Hyd-Ro Parkett Plus) is available in glossy, half-matt and matt.
It's an aqueous polyurethane/acrylate dispersion lacquer. Its main usage is on parquet floors where heavy strain is to be expected. It also can be used on wooden floors, on stair steps and for interior fitting. It's useable as base- and topcoat. It's also appropriate on all common exotic woods.
Field of application: flats, bureaus and stairways.
Hyd-Ro Parquet Plus is NMP-free and can be considered as a W2-product.

Hyd-Ro Parquet 2K (Hyd-Ro Parkett 2K) is available in glossy, half-matt and matt.
It's an aqueous polyurethane/acrylate dispersion lacquer. Its main usage is on parquet floors where extraordinary strain is to be expected. It also can be used on wooden floors, on stair steps and for interior fitting. It's useable as base- and topcoat. It's also appropriate on all common exotic woods.
Field of application: medical rooms, commercial architecturals, wooden public buildings' floors, flats, bureaus and stairways.
Hyd-Ro Parquet 2K is NMP-free and can be considered as a W3-product.

Hyd-Ro Cork-Seal (Hyd-Ro Kork) is available in glossy, half-matt and matt.
It's an aqueous polyurethane/acrylate dispersion. It's used for cork flooring and cork surfaces in interior. It's useable as base- and topcoat.
Field of application: living spaces, bureau rooms and on nursery school rooms.
Hyd-Ro Cork-Seal is NMP-free and can be considered as a W2-product.

Annotation

The usage of the products depends on the kind of wood and the level of strain on the surface. If you use the product as primer you have a normal consumption of 100 g/m². For the following two topcoat-layers you have a normal consumption of 130 g/m² per layer. Therefore you have an additive normal consumption of 360 g/m² for an untreated parquet floor. We advice you to apply all our lacquers by rolling. After a intermediate drying of 3-4 hours and before you apply the first top coat layer, we advice you to sand the surface with a 120 corning sandpaper.

After you applied the last top coat layer wait for about 8 hours before you enter the coated room. After additional 8-10 days the room is fully accessible and resilient. After 21 days you can put carpets on the sealed surfaces. All this times are given on a temperature of 20°C and a relative air dryness of 55%. Higher temperatures or lower air dryness can reduce the times. Lower temperatures and higher air dryness can expand the times.

Please follow the maintenance instruction according to DIN 18356

Hyd-Ro Parquet Care (Hyd-Ro Parkettpflege)
It's for cleaning and care as well as for the attrition reduction of sealed parquet, wooden or cork surfaces. It can also be used on floors made of PVC, linoleum, stone or gum. Base protection, substance care and anti slide.

Hyd-Ro All-Purpose Cleaner – APC (Hyd-Ro Allzweckreiniger)
It cleans all kind of draggled parquet, wooden, PVC, linoleum, stone and gum floors. It's not appropriate for oiled or waxed surfaces.

Hyd-Ro Basic Cleaner (Hyd-Ro Grundreiniger)
It cleans heavily draggled parquet, wooden, PVC, linoleum, stone and gum floors.
It also erases all kind of wax layers and polymer layers, as well as sundry draggle.
It's not appropriate for oiled or waxed surfaces.

Pigment stain (Pigmentbeize)

Are the commercial solution for the design of coloured floors.

They are easy to use, very high covering power and lightfast.

Build-Up

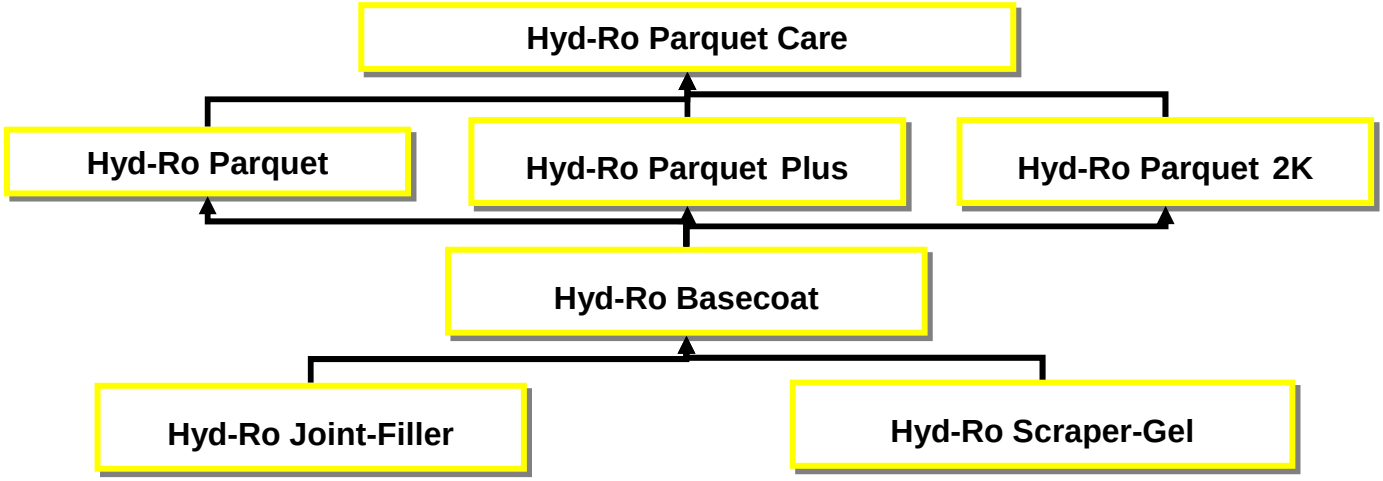

Substrate

Bavarian state chancellery
(Die Bayrischer Staatskanzlei)
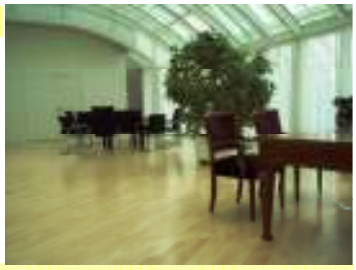
Substrate sealed with
Rosner product Hyd-Ro Parquet Plus.